Optosa's QSFP28-100G-SR4 is a hot pluggable 3.3V QSFP28 100G SR4 optical transceiver for the application of 100GBASE high-speed communication equipment. The data is transmitted with aggregate bandwidth of 4x25.78Gb/s by four 850nm wavelengths. The transmission distance is up to 100m over OM4 Multi-mode fiber.
The QSFP28 SR4 can be used for Cisco QSFP-100G-SR4-S, Juniper JNP-QSFP-100G--SR4, Extreme 10401 and for many more OEMs like D-Link, H3C, Palo Alto, Meraki, Netgear, Arista, Brocade, Huawei, Dell, Alcatel, Nokia, HP, Mellanox, Intel, Broadcom, Lenovo…

RoHS Compliance

Optosa is fully committed to environment protection and sustainable development and has set in place a comprehensive program for removing polluting and hazardous substances from all of its products. The relevant evidence of RoHS compliance is held as part of our controlled documentation for each of our compliant products. RoHS compliance parts are available to order, please refer to the ordering information section for further details.

Product Features

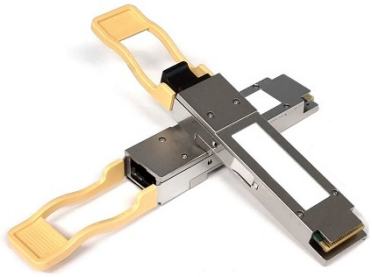

- 4 independent Lanes 850nm VCSEL
- QSFP28 MSA compliant
- PD Array with linear Amplifier
- I2C interface with DDM
- Positive power supply lines: 3.3 V
- Maximum link length of 70m/100m on OM3/OM4 MMF, MPO connector
- Power consumption: <3.5W
- Operating case temperature range: 0 to 70 deg C
- RoHS 6 compliant

Applications

- 100GBASE-SR4 100G Ethernet
- High performance computing interconnect

Ordering Information

Part Number	Description
QSFP28-100G-SR4	100GBASE-SR4 QSFP28 850nm MPO 70m/100m over OM3/OM4. C-Temp

Absolute Maximum Rating

The operation in excess of any absolute maximum ratings might cause permanent damage to this module.

Parameter	Symbol	Min	Max	Unit	Notes
Storage Temperature	Ts	-40	85	℃	
Power Supply	VCC	0	3.6	V	
Relative Humidity	RH	15	85	%	

Recommended Operating Conditions

Parameter	Symbol	Min	Typical	Max	Unit	Notes
Operating Case Temperature	TOP	0		70	℃	
Supply Voltage	VCC	3.135	3.3	3.465	V	
Data Rate (Each Lane)	DR		25.78125		Gb/s	
Power Consumption	PC			3.5	W	
Link Distance	D	0		70/100	m	Over OM3/OM4

Electrical Characteristics

The following electrical characteristics are defined over the Recommended Operating Environment unless otherwise specified

Parameter	Symbol	Min	Typical	Max	Unit	Notes
Differential Data input Swing	VIN	100		900	mV	
Input Differential Impedance	Zin		100		Ω	
Transmitter Disable Voltage	VD	2.0		Vcc	V	
Transmitter Enable Voltage	VEN	0		0.8	V	
Differential Data Output Swing	V_{ouT}	300	600	900	mV	
Output Differential Impedance	Z_{out}		100		Ω	
LOS Assert Voltage	V_{LOSA}	2.0		Vcc	V	
LOS De-assert Voltage	V_{LOSD}	0		0.8	V	

Optical Characteristics

Parameter	Symbol	Min	Typical	Max	Unit	Notes
Transmitter						
Average Output Power, each lane	POUT	-8.4		2.4	dBm	Average Optical Output
Optical modulation Amplitude, each lane	OMA	-6.4		3	dBm	
Extinction ratio	ER	2			dB	
Average Output Power (Laser Off)	POFF			-30	dBm	
Center Wavelength	λ	840	850	860	nm	
RMS Spectral Width	△λ			0.6	nm	

Optical Return Loss Tolerance	ORLT			12	dB	
Eye Mask Margin, Hit ratio 1.5E-3 hits/sample					%	Definition & Template {X1,X2,X3,Y1,Y2,Y3}= 0.3:0.38:0.45:0.35:0.41: 0.5
Receiver						
Average power at receive input, each lane	Pin	-10.3		2.4	dBm	
Unstressed receiver sensitivity, each lane(max)	Sen			-7.2	dBm	BER:5E-5 Measured with RPBS 2^31-1 test pattern @25.78Gbs
Receiver Damage Threshold, per Lane	PRdmg	3.4			dBm	
Center Wavelength	λ	840	850	860	nm	
Receiver Reflectance	RFL			-12	dB	
Rx_LOS of Signal Assert	PA	-30			dBm	
Rx_LOS of Signal De-assert	PD			-13	dBm	
Rx_LOS of Signal Hysteresis	PHy	0.5	2	6	dB	

Block Diagram of Transceiver

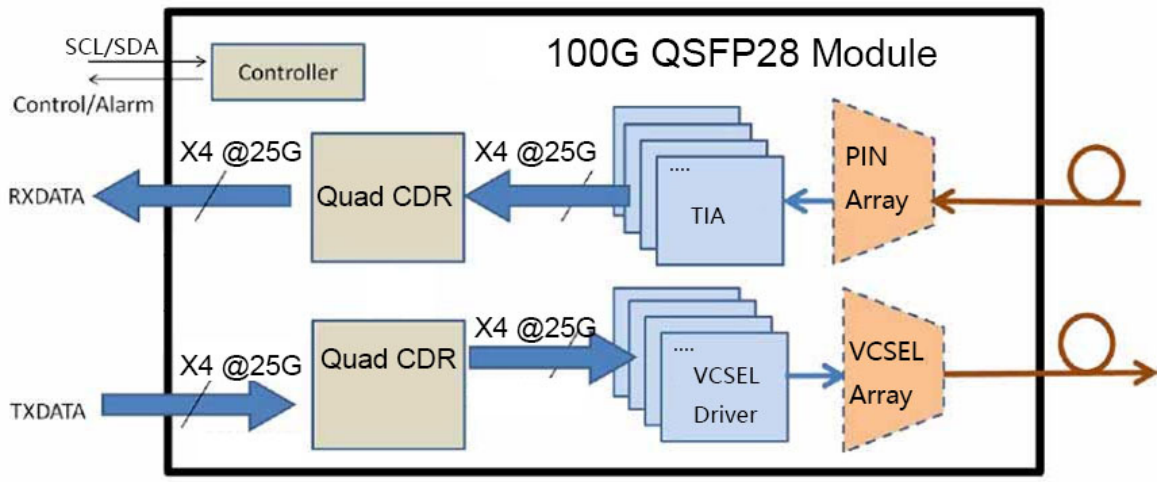

Digital Diagnostic Functions

The following digital diagnostic characteristics are defined over the normal operating conditions unless otherwise specified.

Parameter	Symbol	Min	Max	Unit	Notes
Temperature monitor absolute error	DMI_Temp	-5	5	℃	
Supply voltage monitor absolute error	DMI_VCC	-0.1	0.1	V	
Channel RX power monitor absolute error	DMI_RX_Ch	-3	3	dB	
Channel Bias current monitor	DMI_Ibias_Ch	-10%	10%	mA	
Channel TX power monitor absolute error	DMI_TX_Ch	-3	3	dB	

Mechanical Dimensions

Units: nm

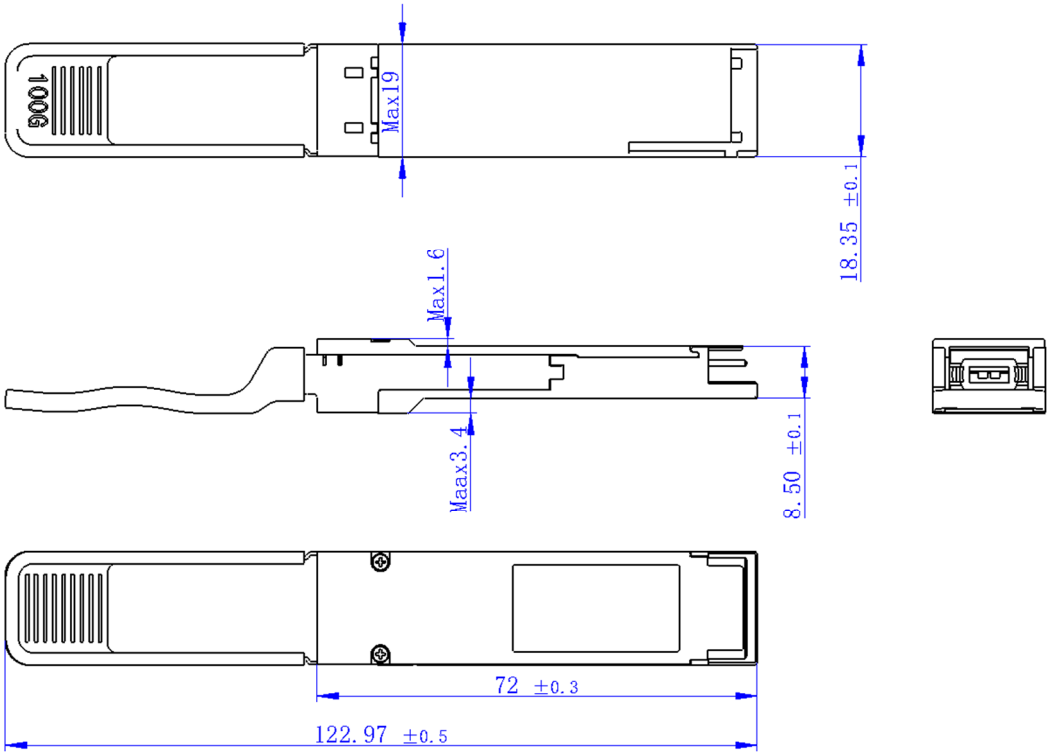

Pin Assignment and Description

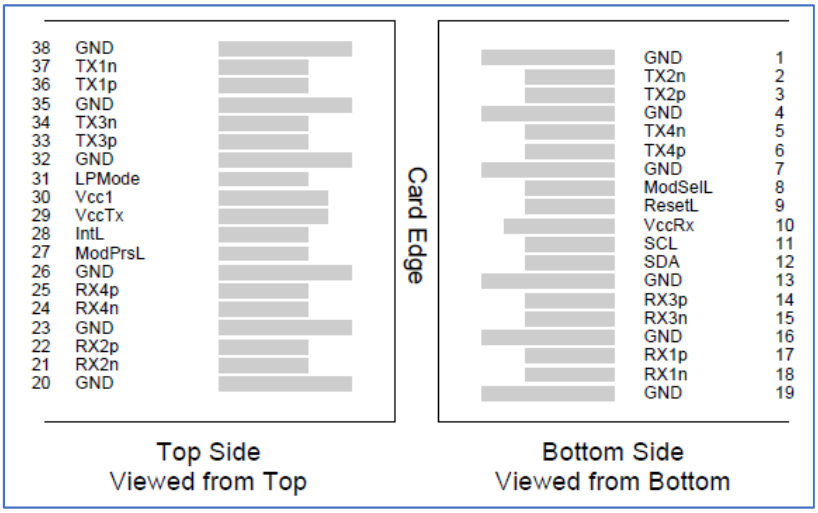

Pin Assignment

Pin	Logic	Symbol	Description	Plug Sequence
1		GND	Ground	1
2	CML-I	Tx2n	Transmitter Inverted Data Input	3
3	CML-I	Tx2p	Transmitter Non-Inverted Data Input	3
4		GND	Ground	1
5	CML-I	Tx4n	Transmitter Inverted Data Input	3
6	CML-I	Tx4p	Transmitter Non-Inverted Data Input	3
7		GND	Ground	1
8	LVTTL-I	ModSelL	Module Select	3
9	LVTTL-I	ResetL	Module Reset	3
10		Vcc Rx	+3.3V Power Supply Receiver	2
11	LVCMOS-I/O	SCL	2-wire serial interface clock	3
12	LVCMOS-I/O	SDA	2-wire serial interface data	3
13		GND	Ground	1
14	CML-O	Rx3p	Receiver Non-Inverted Data Output	3
15	CML-O	Rx3n	Receiver Inverted Data Output	3
16		GND	Ground	1
17	CML-O	Rx1p	Receiver Non-Inverted Data Output	3
18	CML-O	Rx1n	Receiver Inverted Data Output	3
19		GND	Ground	1
20		GND	Ground	1
21	CML-O	Rx2n	Receiver Inverted Data Output	3
22	CML-O	Rx2p	Receiver Non-Inverted Data Output	3
23		GND	Ground	1
24	CML-O	Rx4n	Receiver Inverted Data Output	3
25	CML-O	Rx4p	Receiver Non-Inverted Data Output	3
26		GND	Ground	1
27	LVTTL-O	ModPrsL	Module Present	3
28	LVTTL-O	IntL	Interrupt	3
29		Vcc Tx	+3.3V Power supply transmitter	2
30		Vcc1	+3.3V Power supply	2
31	LVTTL-I	LPMode	Low Power Mode	3
32		GND	Ground	1
33	CML-I	Tx3p	Transmitter Non-Inverted Data Input	3
34	CML-I	Tx3n	Transmitter Inverted Data Input	3
35		GND	Ground	1
36	CML-I	Tx1p	Transmitter Non-Inverted Data Input	3
37	CML-I	Tx1n	Transmitter Inverted Data Input	3
38		GND	Ground	1

ESD

This transceiver is specified as ESD threshold 1kV for SFI pins and 2kV for all other electrical input pins, tested per MIL-STD-883, Method 3015.4 /JESD22-A114-A (HBM). However, normal ESD precautions are still required during the handling of this module. This transceiver is shipped in ESD protective packaging. It should be removed from the packaging and handled only in an ESD protected environment.

Laser Safety

This is a Class 1 Laser Product according to IEC 60825-1:2007. This product complies with 21 CFR 1040.10 and 1040.11 except for deviations pursuant to Laser Notice No. 50, dated (June 24, 2007).